# 1524.0*2438.0*1219.2mm

Scale: 2:1

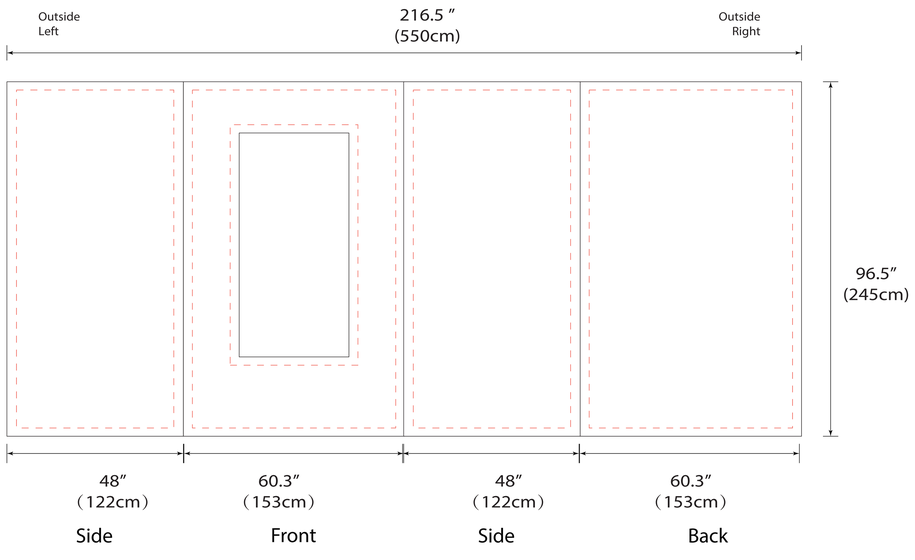


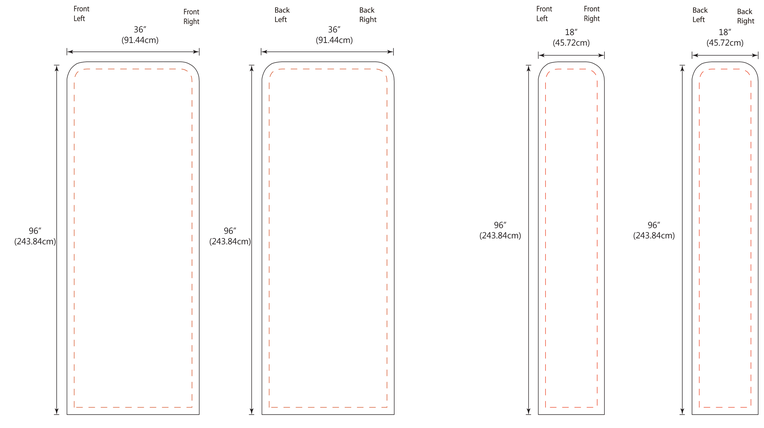


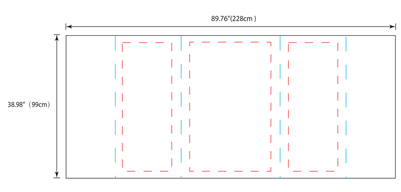


# 8FT*8FT

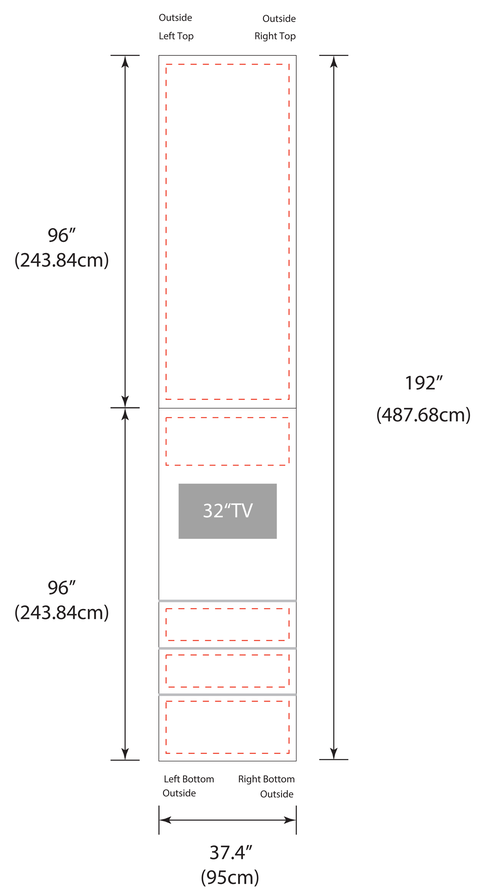


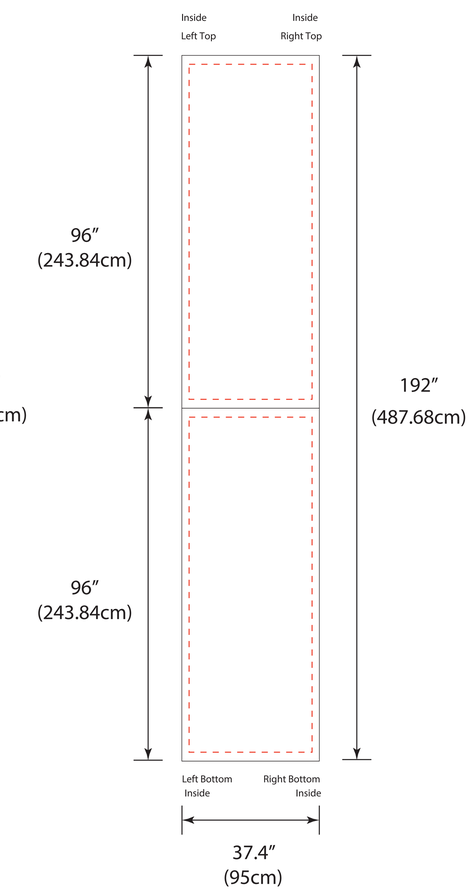


1:10

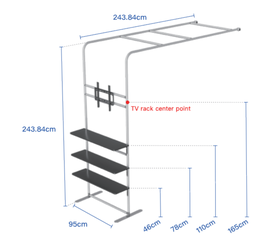


8x8ft