1： 10

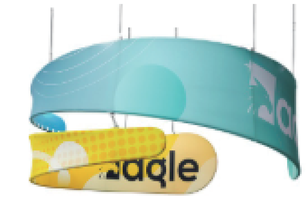

Right Outside

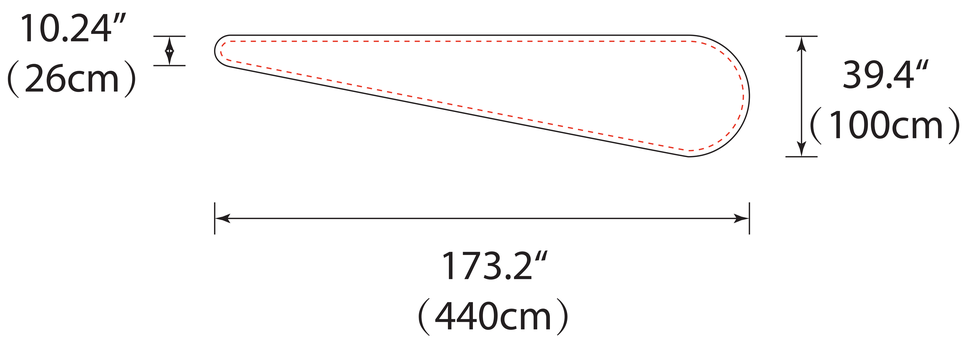

Right Inside

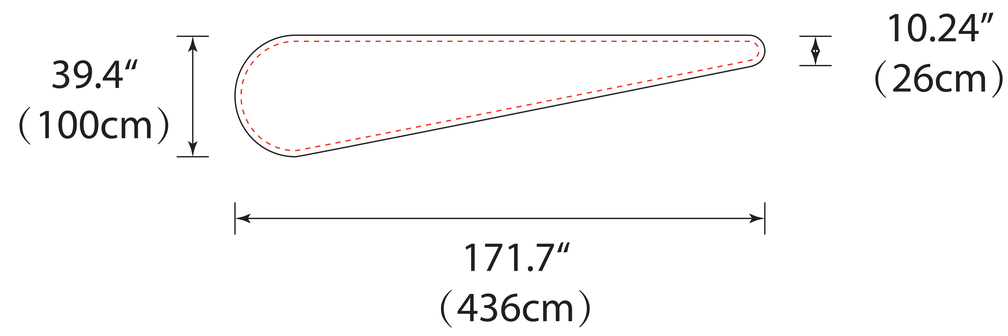

Left Outside

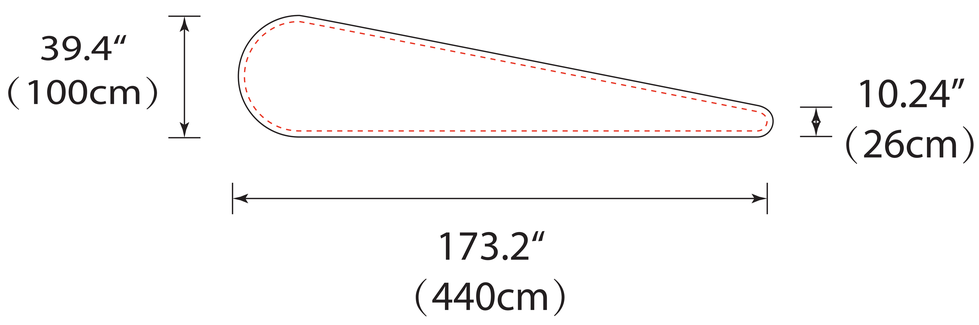
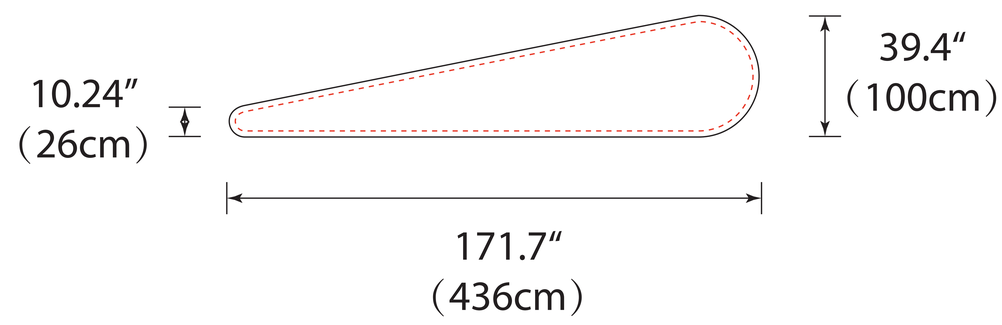
Left Inside