1 : 10

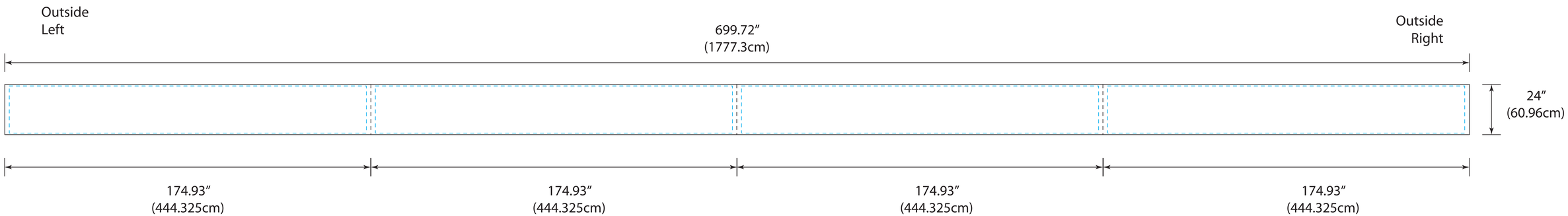
Outside
Left
699.72″
(1777.3cm)
Outside
Right
24″
(60.96cm)
174.93″
(444.325cm)
174.93″
(444.325cm)
174.93″
(444.325cm)
174.93″
(444.325cm)

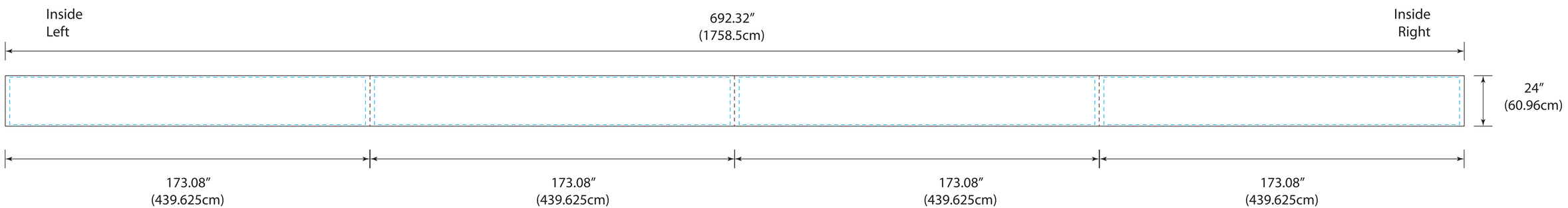
Inside
Left
692.32″
(1758.5cm)
Inside
Right
24″
(60.96cm)
173.08″
(439.625cm)
173.08″
(439.625cm)
173.08″
(439.625cm)
173.08″
(439.625cm)