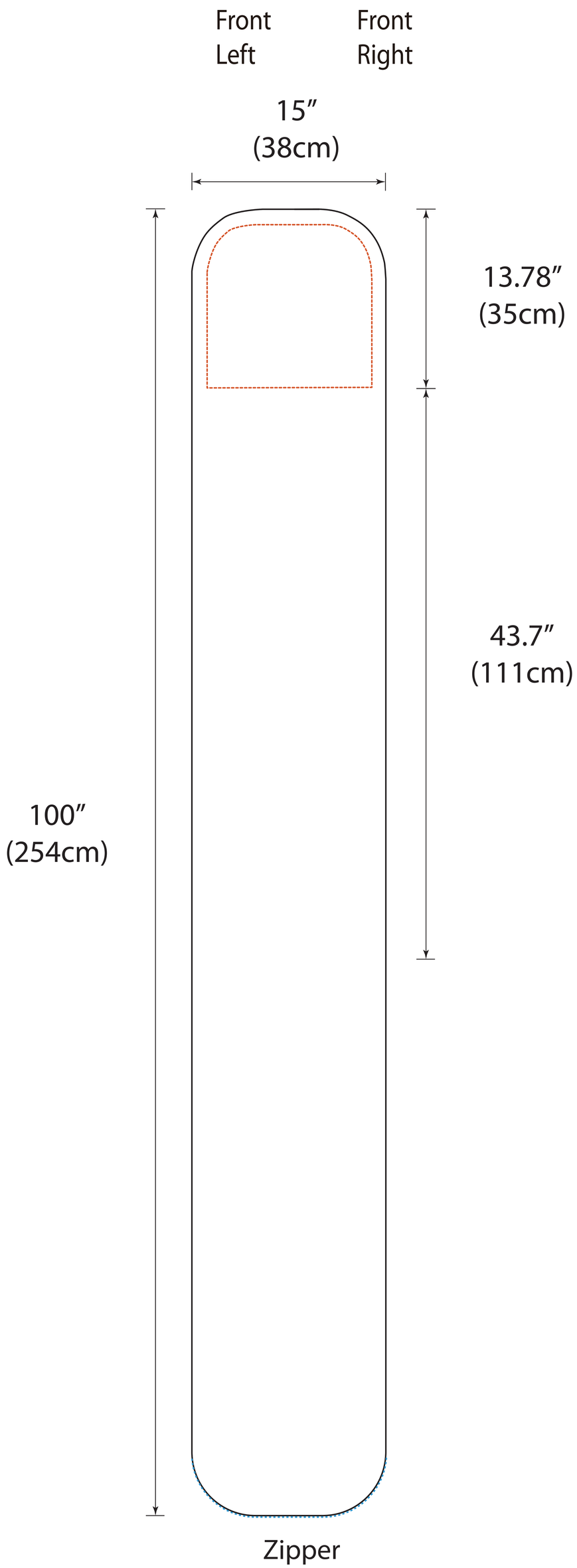
Front
Left
Front
Right
15″
(38cm)
13.78″
(35cm)
43.7″
(111cm)
100″
(254cm)
Zipper

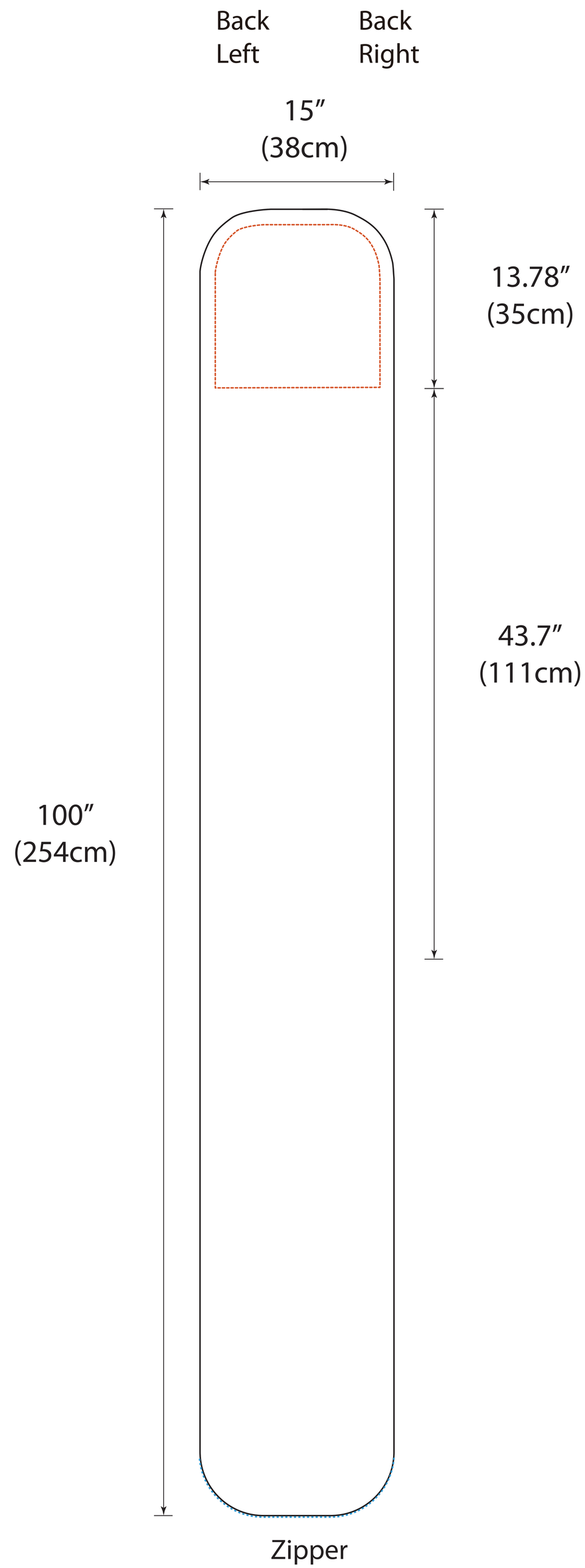
Back
Left
Back
Right
15″
(38cm)
13.78″
(35cm)
43.7″
(111cm)
100″
(254cm)
Zipper

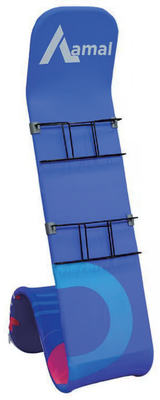
amal