1 : 10

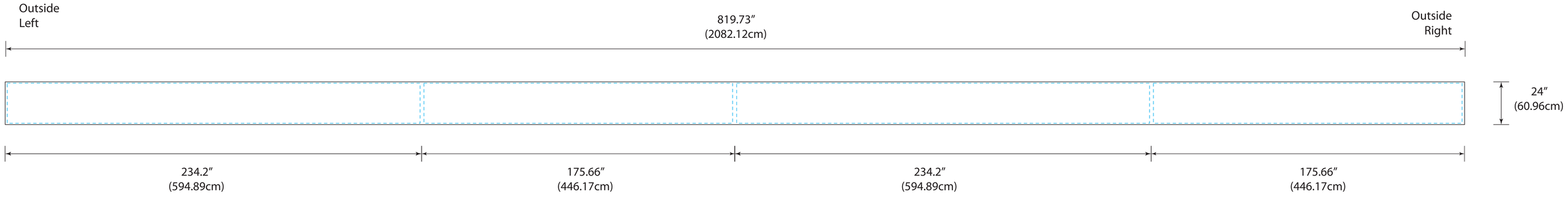
Outside
Left
819.73″
(2082.12cm)
Outside
Right
24″
(60.96cm)
234.2″
(594.89cm)
175.66″
(446.17cm)
234.2″
(594.89cm)
175.66″
(446.17cm)

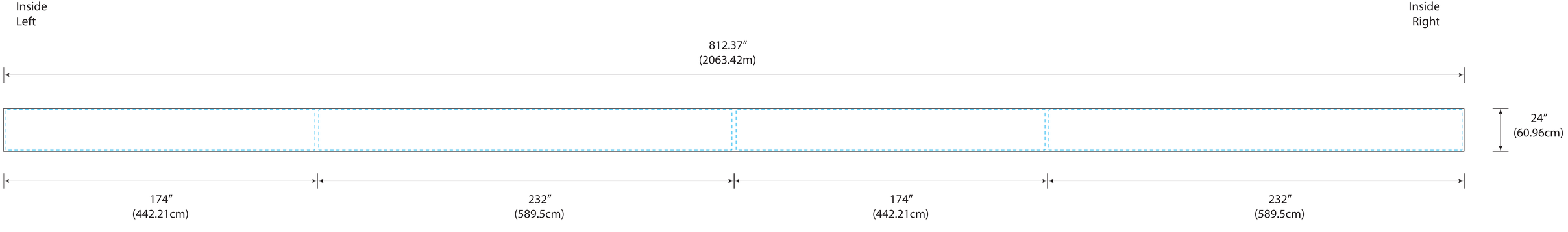
Inside
Left
Inside
Right
812.37″
(2063.42m)
24″
(60.96cm)
174″
(442.21cm)
232″
(589.5cm)
174″
(442.21cm)
232″
(589.5cm)