Top

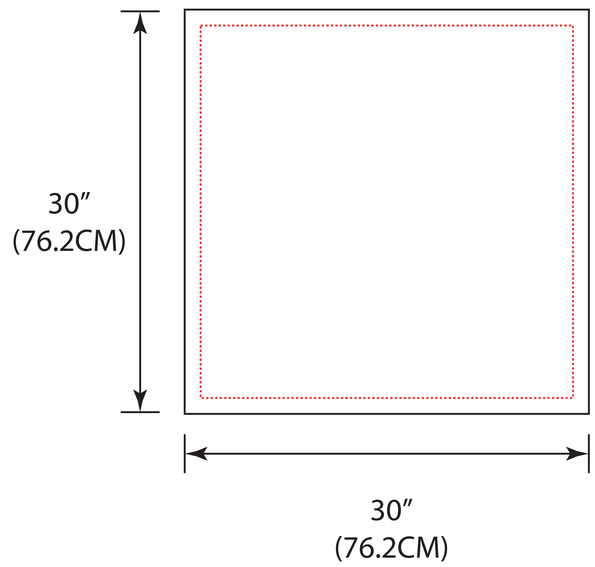

Left

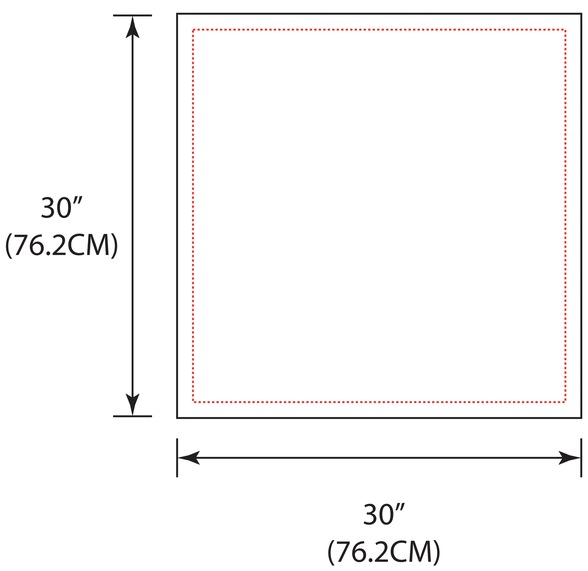

Front

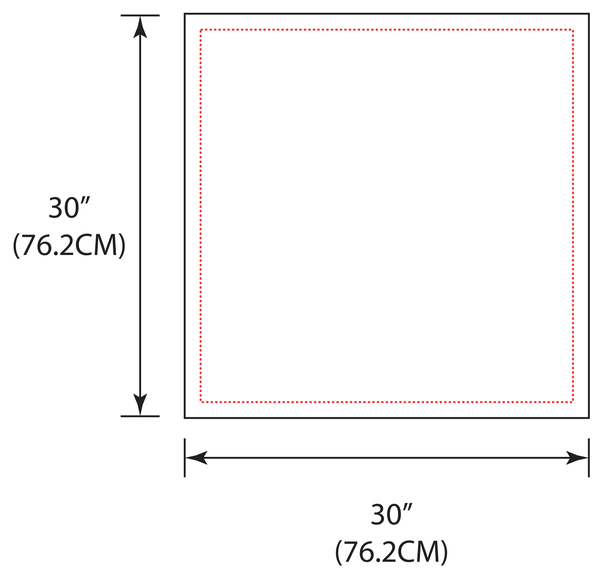

Right

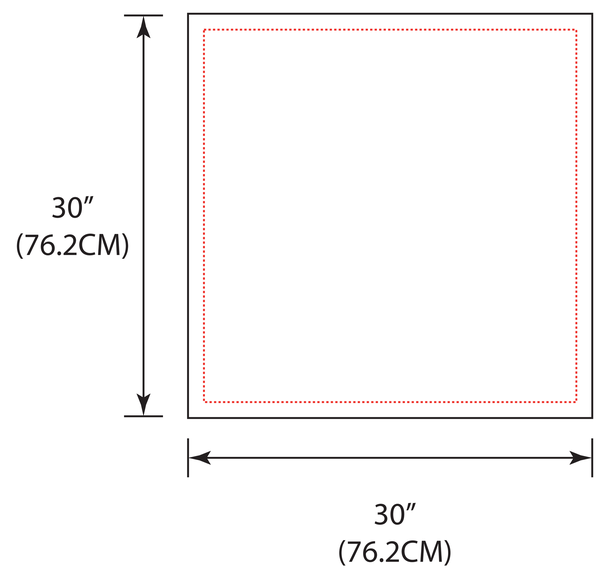

Back

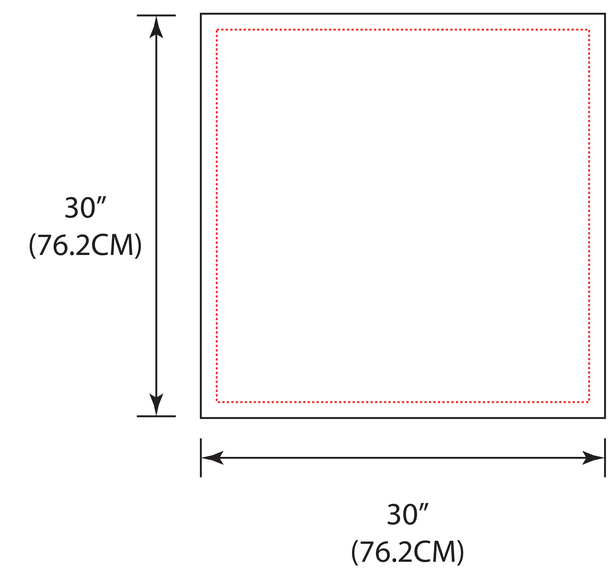
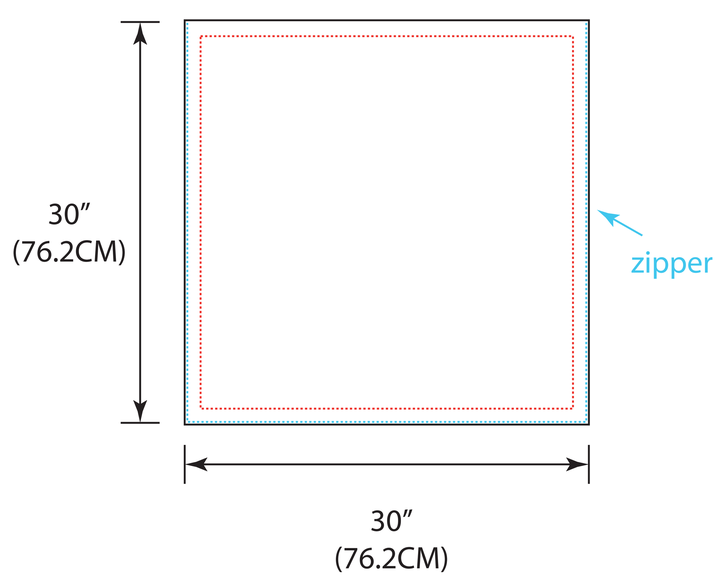
Bottom