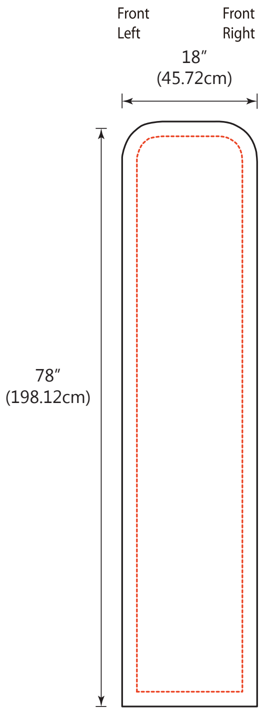
Front
Left
Front
Right
18″
(45.72cm)
78″
(198.12cm)

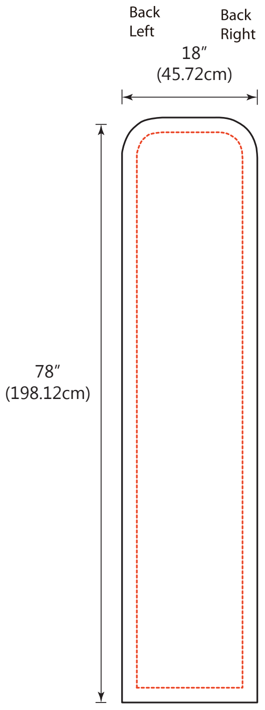
Back
Left
Back
Right
18″
(45.72cm)
78″
(198.12cm)

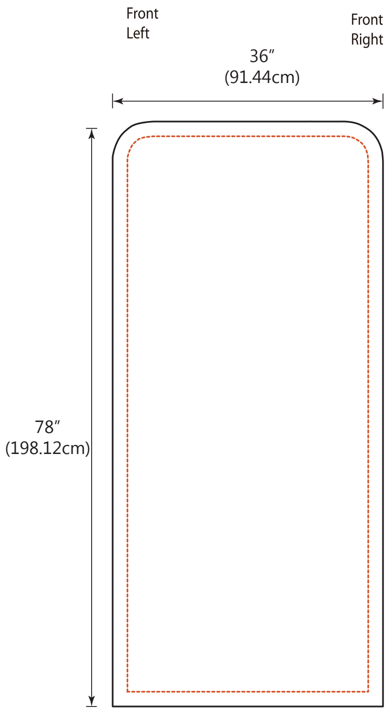
Front
Left
Front
Right
36″
(91.44cm)
78″
(198.12cm)

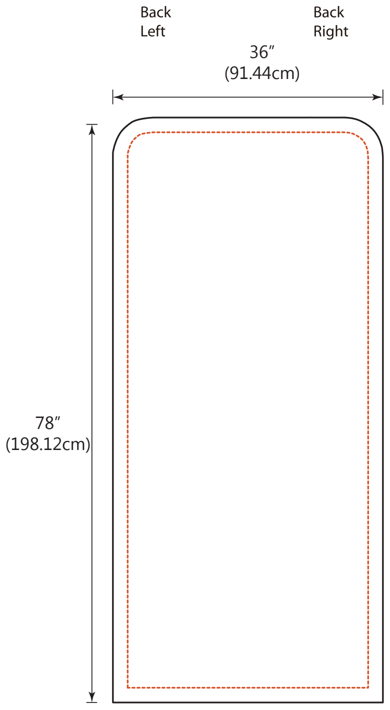
Back
Left
Back
Right
36″
(91.44cm)
78″
(198.12cm)

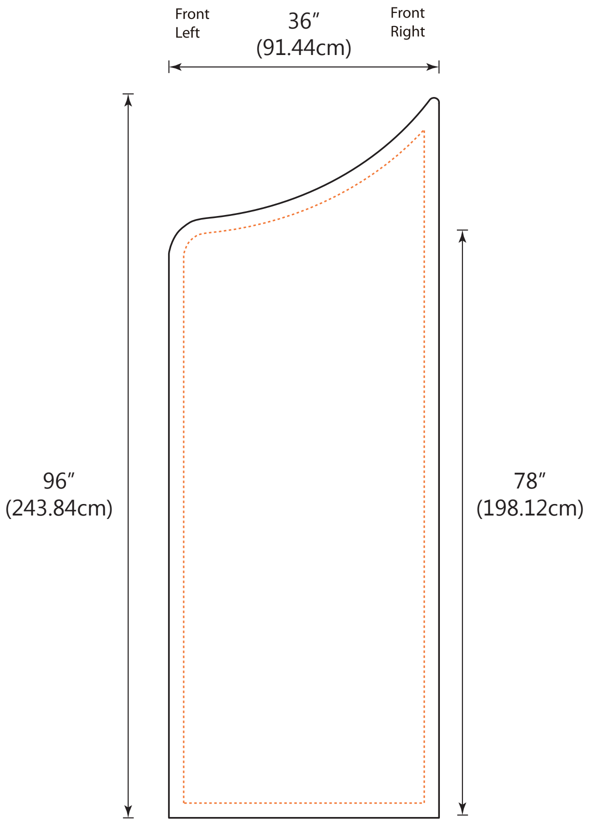
Front
Left
36″
(91.44cm)
Front
Right
96″
(243.84cm)
78″
(198.12cm)

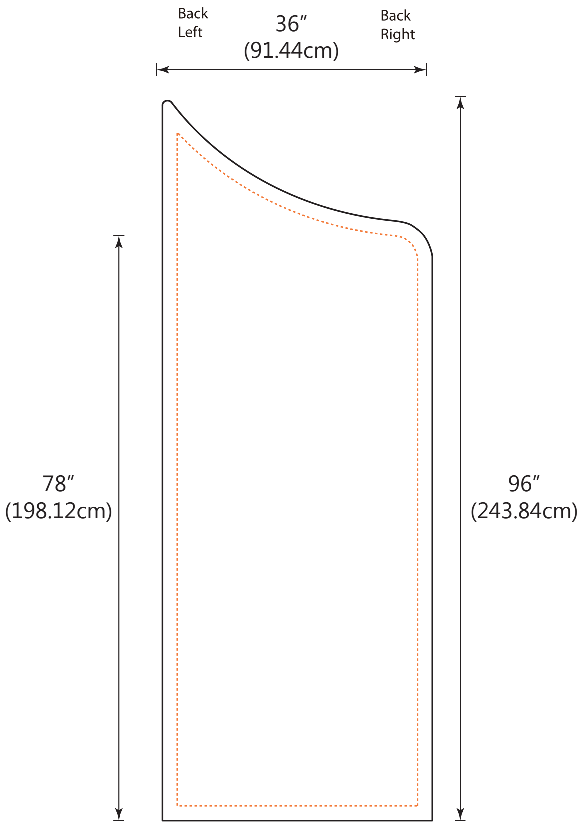
Back
Left
36″
(91.44cm)
Back
Right
78″
(198.12cm)
96″
(243.84cm)

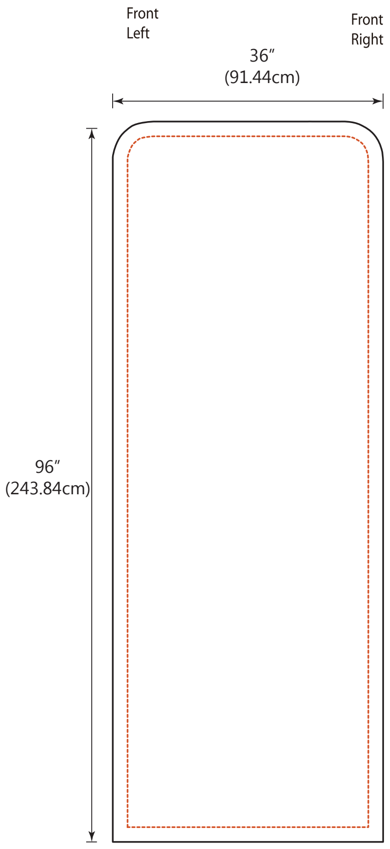
Front
Left
Front
Right
36″
(91.44cm)
96″
(243.84cm)

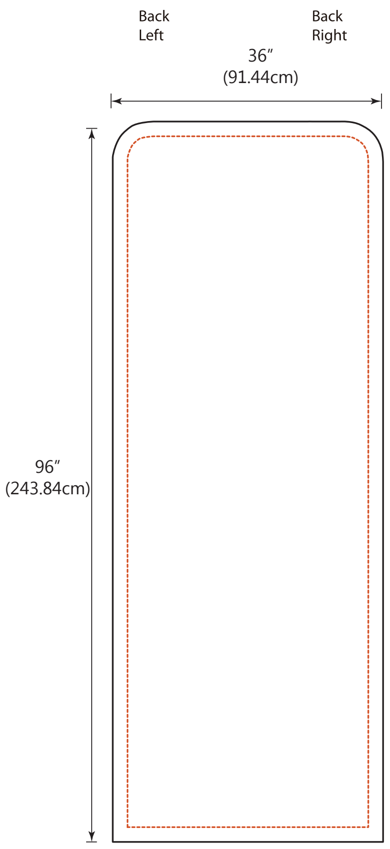
Back
Left
Back
Right
36″
(91.44cm)
96″
(243.84cm)

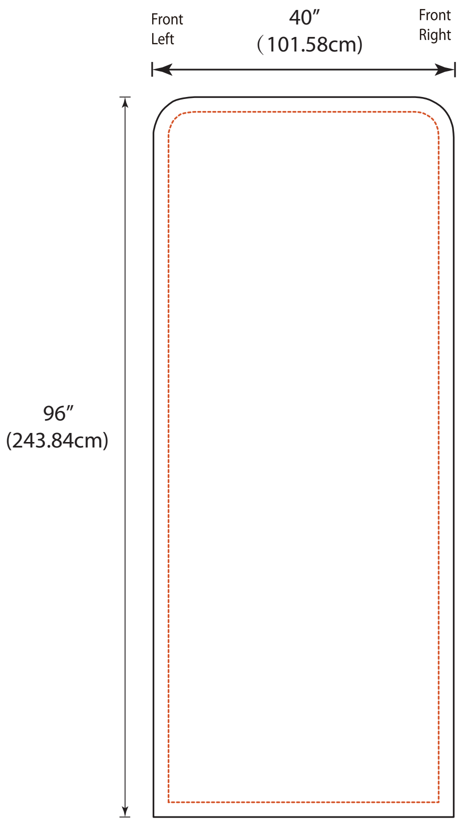
Front
Left
40″
(101.58cm)
Front
Right
96″
(243.84cm)

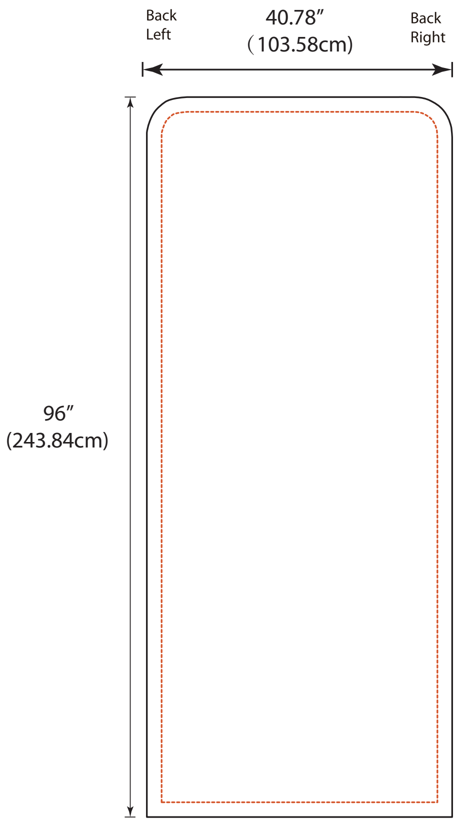
Back
Left
40.78″
(103.58cm)
Back
Right
96″
(243.84cm)

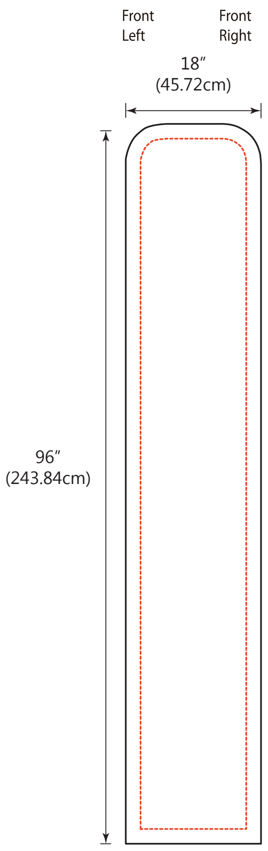
Front
Left
Front
Right
18″
(45.72cm)
96″
(243.84cm)

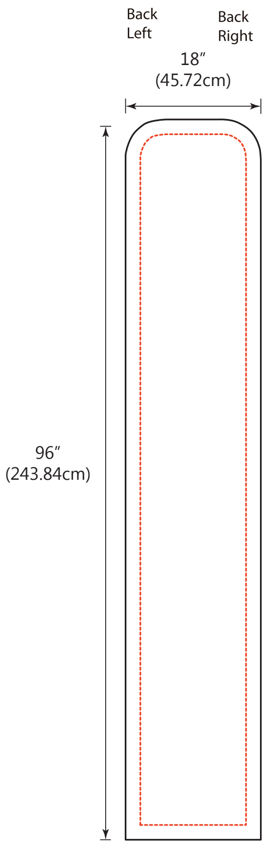
Back
Left
Back
Right
18″
(45.72cm)
96″
(243.84cm)

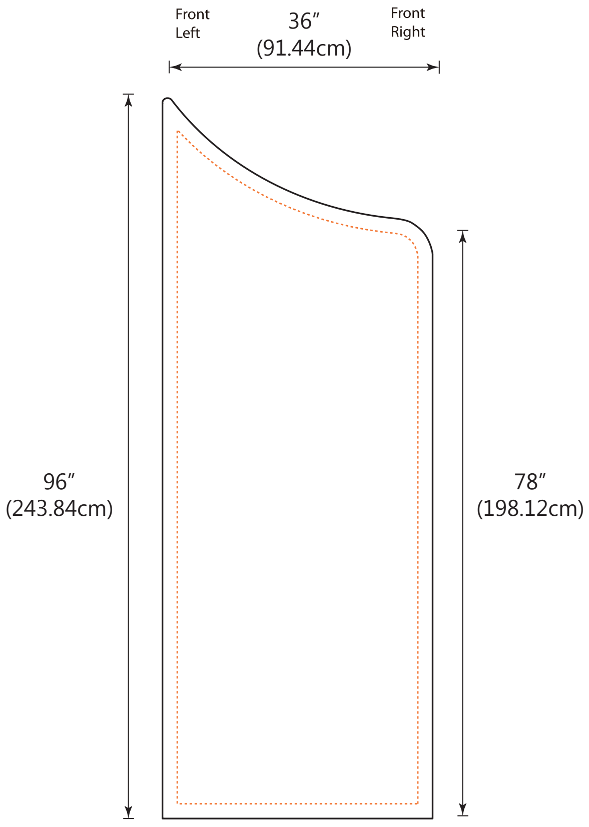
Front
Left
36″
(91.44cm)
Front
Right
96″
(243.84cm)
78″
(198.12cm)

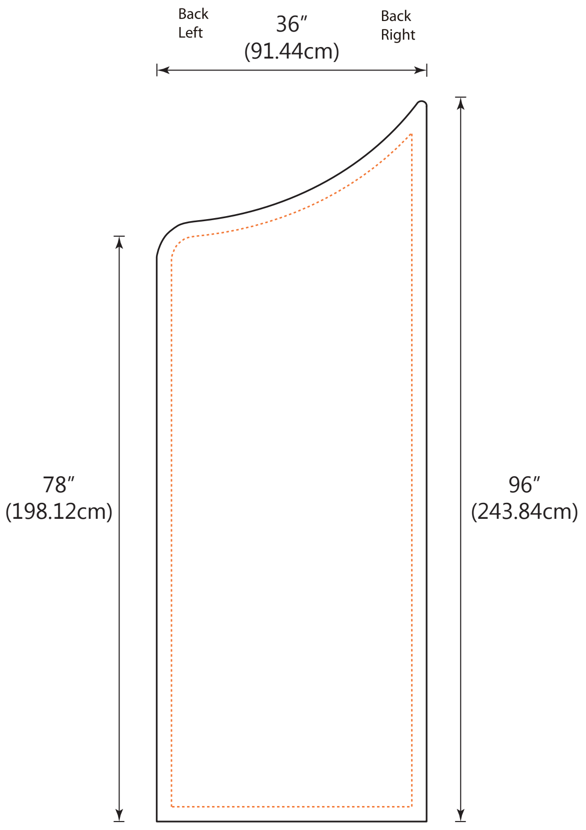
Back
Left
36″
(91.44cm)
Back
Right
78″
(198.12cm)
96″
(243.84cm)

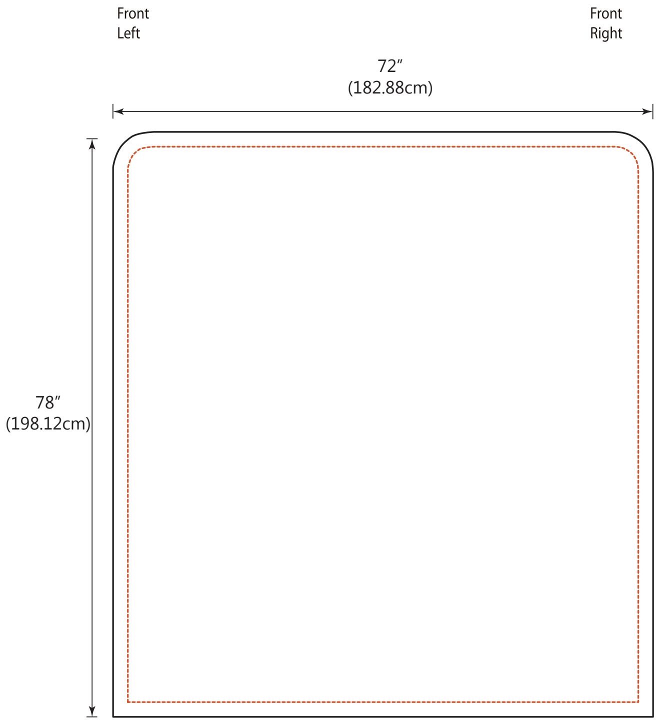
Front
Left
Front
Right
72″
(182.88cm)
78″
(198.12cm)

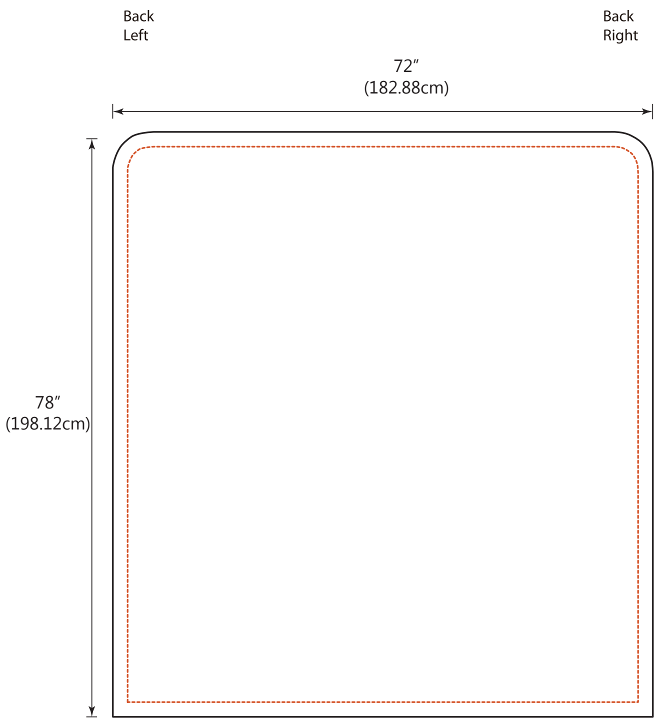
Back
Left
Back
Right
72″
(182.88cm)
78″
(198.12cm)

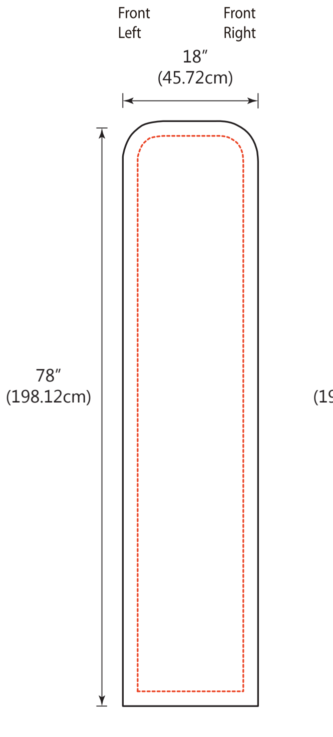
Front
Left
Front
Right
18″
(45.72cm)
78″
(198.12cm)