1:10

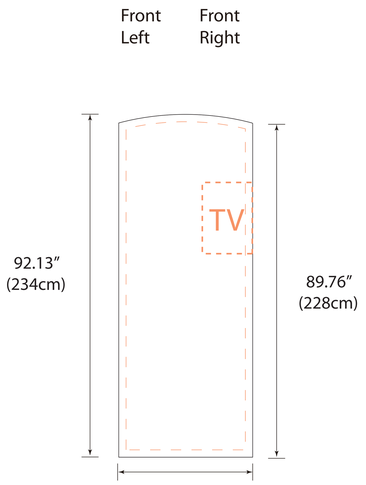
Front Left
Front Right
TV
92.13″ (234cm)
89.76″ (228cm)
36″ (91.44cm)

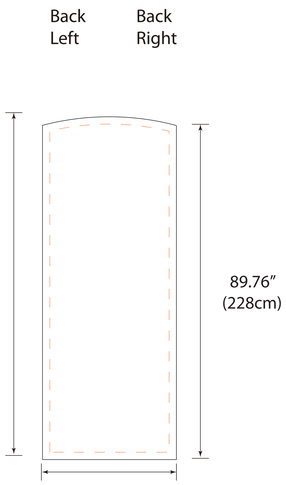
Back Left
Back Right
92.13″ (234cm)
89.76″ (228cm)
36″ (91.44cm)

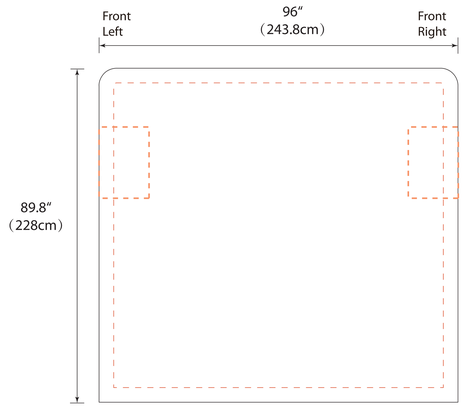
Front Left
96″ (243.8cm)
Front Right
89.8″ (228cm)

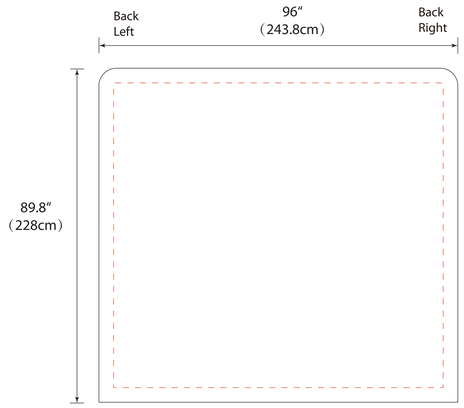
Back Left
96″ (243.8cm)
Back Right
89.8″ (228cm)

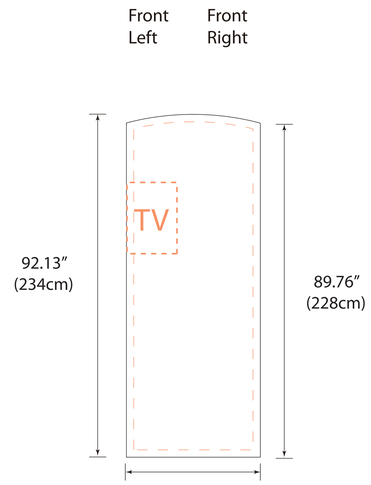
Front Left
Front Right
TV
92.13″ (234cm)
89.76″ (228cm)
36″ (91.44cm)

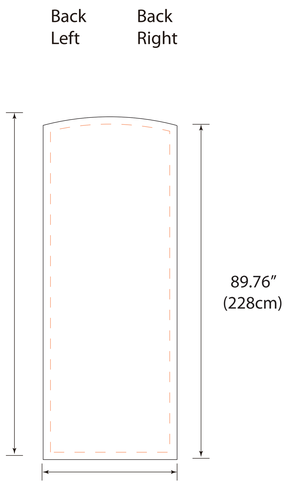
Back Left
Back Right
92.13″ (234cm)
89.76″ (228cm)
36″ (91.44cm)

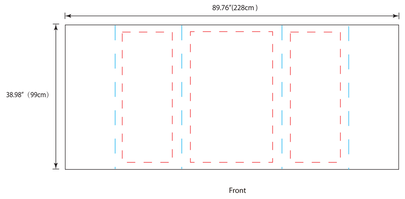
89.76″(228cm)
38.98″ (99cm)
Front

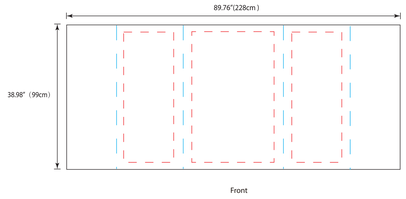
89.76″(228cm)
38.98″ (99cm)
Front