1: 10

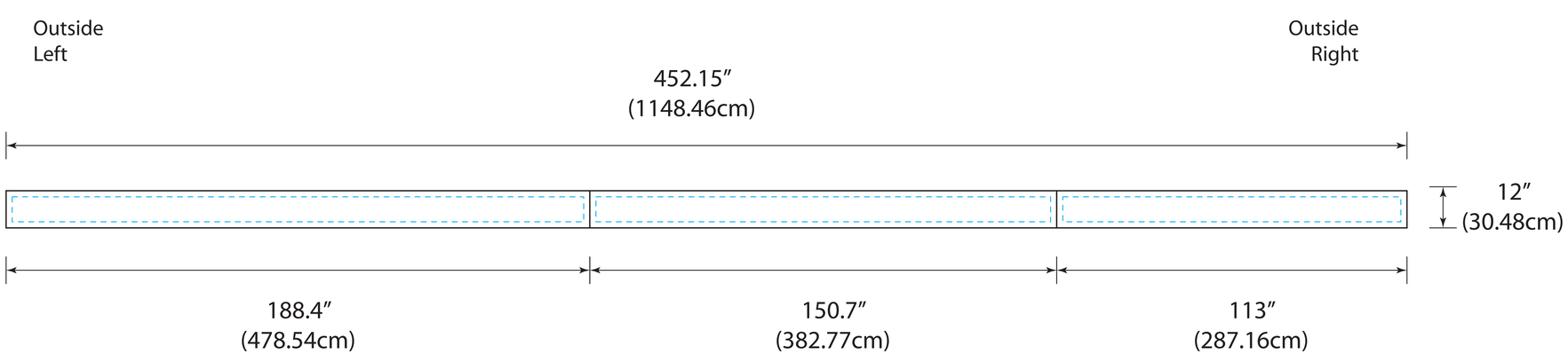
Outside
Left
Outside
Right
452.15″
(1148.46cm)
12″
(30.48cm)
188.4″
(478.54cm)
150.7″
(382.77cm)
113″
(287.16cm)

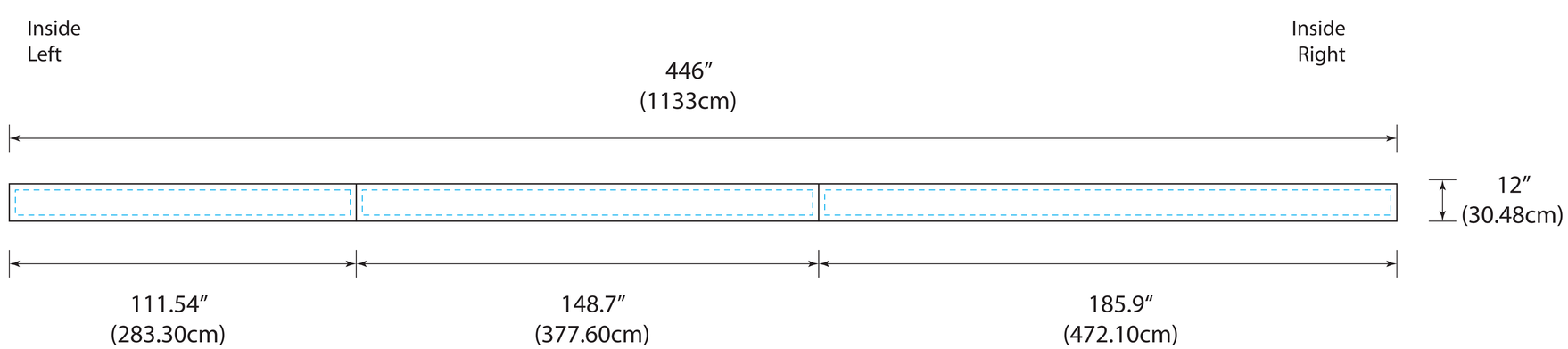
Inside
Left
Inside
Right
446″
(1133cm)
12″
(30.48cm)
111.54″
(283.30cm)
148.7″
(377.60cm)
185.9″
(472.10cm)

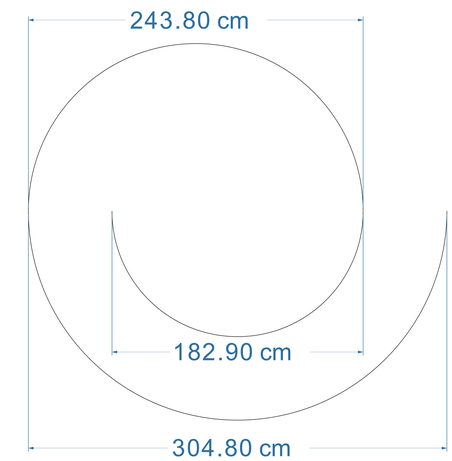
243.80 cm
182.90 cm
304.80 cm